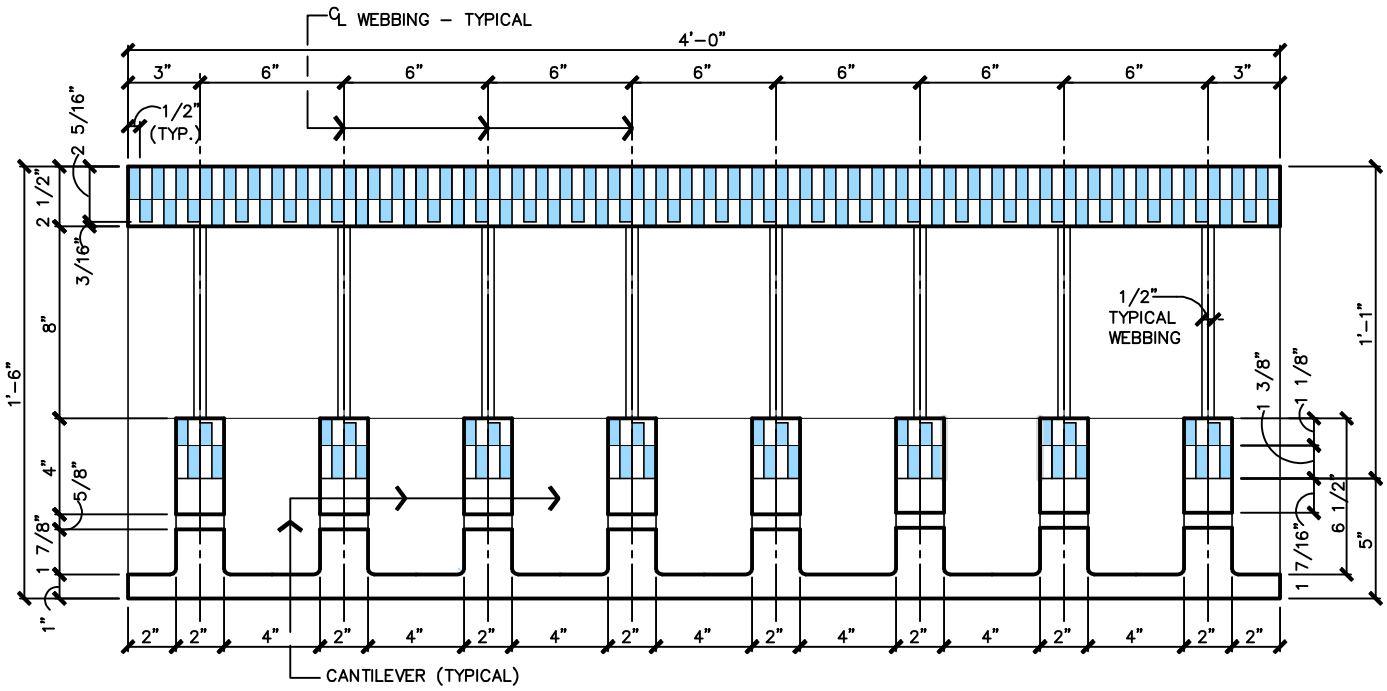

2/05 TOP VIEW
SCALE: 1 1/2" = 1'–0"

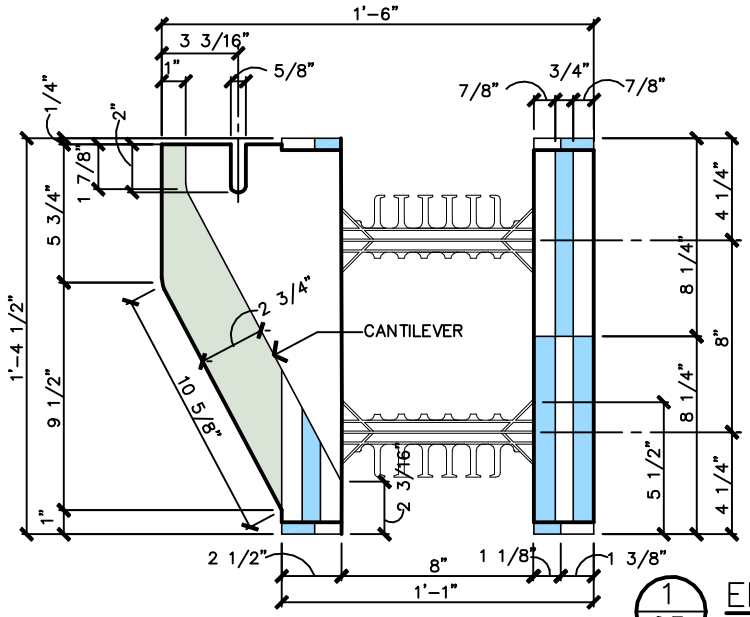

1/05 END VIEW
SCALE: 1 1/2" = 1'–0"

LEGEND

- ■ = POSITIVE PROFILES (TOUNGES)
- □ = NEGATIVE PROFILES (GROOVES)
- ▒ = BASELINE

NOTE:
DUE TO VARIATIONS IN SELECTED PRINTER SETTINGS, NOTED SCALES MAY NO LONGER BE APPLICABLE

BB BuildBlock
BUILDING SYSTEMS, LLC
9701 N. Broadway Extension
Oklahoma City, Oklahoma 73114
www.buildblock.com
Office (405) 840–3386
Fax (405) 840–0625
Toll Free 1–866–222–2575

8" LEDGE BLOCK		
DATE / REVISION	02-09-06	DETAIL SHEET 05
SCALE	AS NOTED	
FILE NAME	BBDTL–05.AEC	

Construction shall be built in accordance with all applicable local and national building codes. All drawings are subject to change without notice.